1. **PRODUCT**

   20 Oz. DR PEPPER PET- 2.91 x 9.05" Long

2. **PRODUCT CAPACITY**

   28 PER COLUMN - 72", 34 PER COLUMN - 79"

3. **SET UP GUIDE UNIVENDOR-2**

Product	CAM POSITION	BACK SPACER	GAGE BAR	Sold out Lever	SIDE SHIM	GAGE BAR CLIP		BUCKET KIT #
						Part No.	Position	
20 Oz. Dr Pepper	2	9	1	389242 SHORT	NONE	1066112	1	1073775M 10 Columns

Note: To properly vend 20oz. PET Dr Pepper. The Univendor-2 must have the columns setup as illustrated.

4. **GAGE BAR CLIP SET UP.**

Front of Column

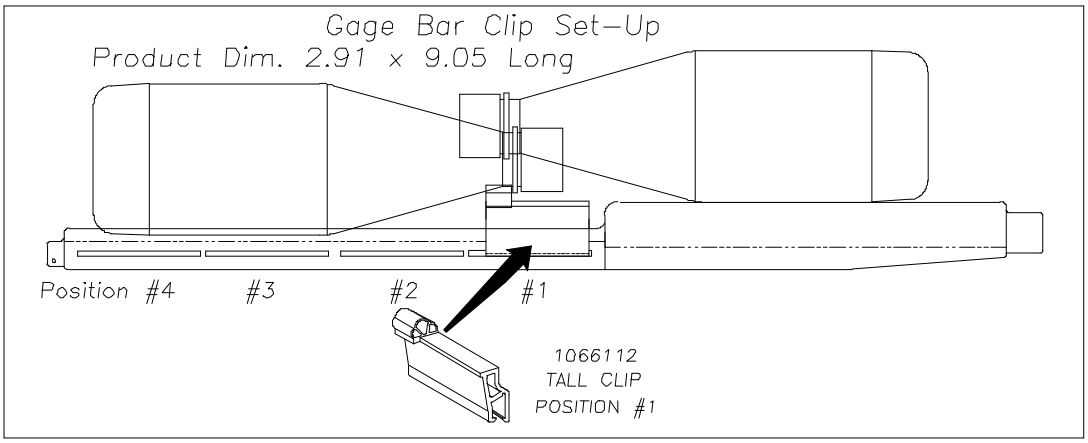

Rear of Column

Note: Gage bar clip functioning as anti-theft device and therefore <u>must</u> be installed.

5. **SET UP GUIDE.**

Column Load
See Note # 8

Back Spacer Position	Gage Bar Position	Cam Position	Side Shim & Position
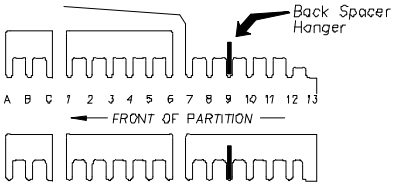 POSITION #9	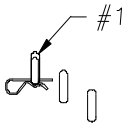	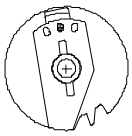 DOUBLE DEPTH	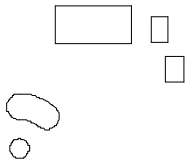 NO SHIMS

6. **BUCKET SET- UP: (requires kit #1088104) install foam tape into buckets per installation instructions included in kit.**

7. **SOLD-OUT LEVER TO BE SHORT STYLE WITH FRONT SPACER : Spring to be located on the right side (low pressure setting).**

8. **The bottles MUST be loaded as follows to avoid jams:**

   Arrange bottle caps so that the cap of the FRONT BOTTLE of each layer of 2 bottles (front & rear) is on TOP of the rear bottle-cap in that layer. For easiest loading, place rear bottle first, followed by front, then alternating rear & front until column is full, being careful to maintain the prescribed pattern.