1. **PRODUCT**

   20 Oz. DR PEPPER (RED DIE) PET- 2.91 x up to 9.00" Long

2. **PRODUCT CAPACITY**

   28 PER COLUMN - 72", 34 PER COLUMN - 79"

3. **SET UP GUIDE UNIVENDOR-2**

Product	CAM POSITION	BACK SPACER	GAGE BAR	Sold out Lever	SIDE SHIM	GAGE BAR CLIP Part No.	GAGE BAR CLIP Position	BOTTLE GUIDE
20 Oz. Dr Pepper	2	13	1	389242 SHORT	NONE	1066112	1	1088236

Note: To properly vend 20oz. PET Dr Pepper. The Univendor-2 must have the columns setup as illustrated.

4. **GAGE BAR CLIP SET UP.**

Front of Column

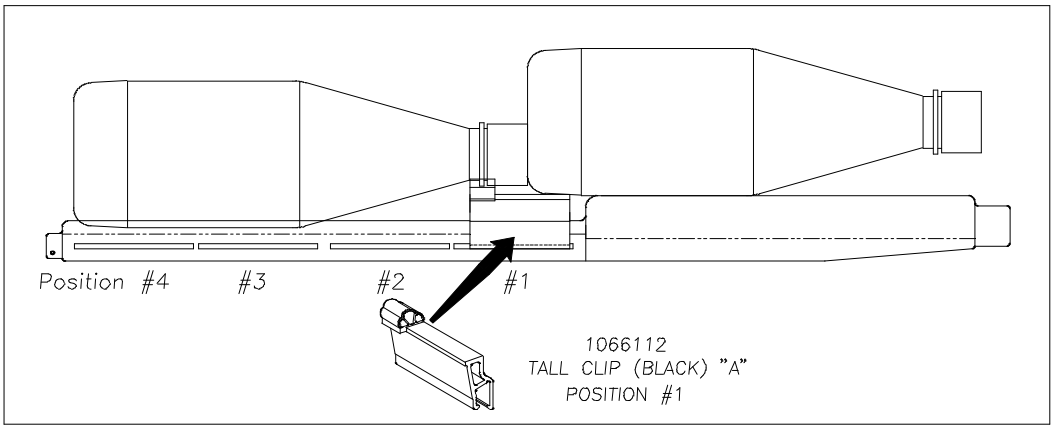

Rear of Column

Note: Gage bar clip functioning as anti-theft device and therefore <u>must</u> be installed.

5. **SET UP GUIDE.**

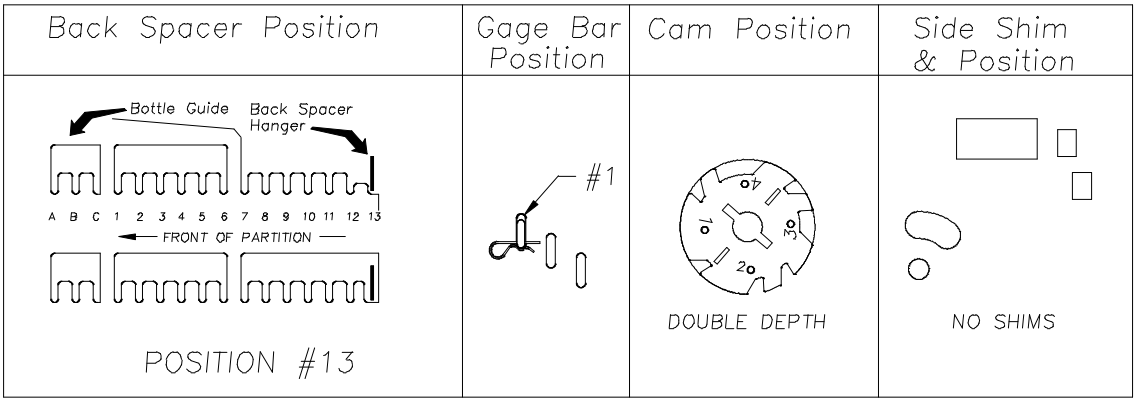

6. **Bottle Guide Position Set-Up: (requires kit #1088236) Right Hand Partition set in B position, Left Hand Partition set in A position.**
7. **SOLD-OUT LEVER TO BE SHORT STYLE WITH NEW FRONT SPACER #1077457: Spring to be located on the right side (low pressure setting).**
8. **FOR OTHER PRODUCT SET UP GUIDES CONTACT VENDO COMPANY.**
   TEL: (559) 439-1770 FAX: (559) 439-2083.