1. PRODUCT

20 OZ. 7 UP SPLASH PET - 2.85 x 8.92 Long

2. PRODUCT CAPACITY

28 PER COLUMN - 72", 34 PER COLUMN - 79"

3. SET UP GUIDE UNIVENDOR-2

Product	CAM POSITION	BACK SPACER	GAGE BAR	Sold out Lever	SIDE SHIM	GAGE BAR CLIP	
						Part No.	Position
20 oz 7 UP	2	13	1	389242 SHORT	TWO 1066821	1066112	1

Note: To properly vend 20 oz.7 UP. The Univendor-2 must have the columns setup correctly.

4. GAGE BAR CLIP SET UP.

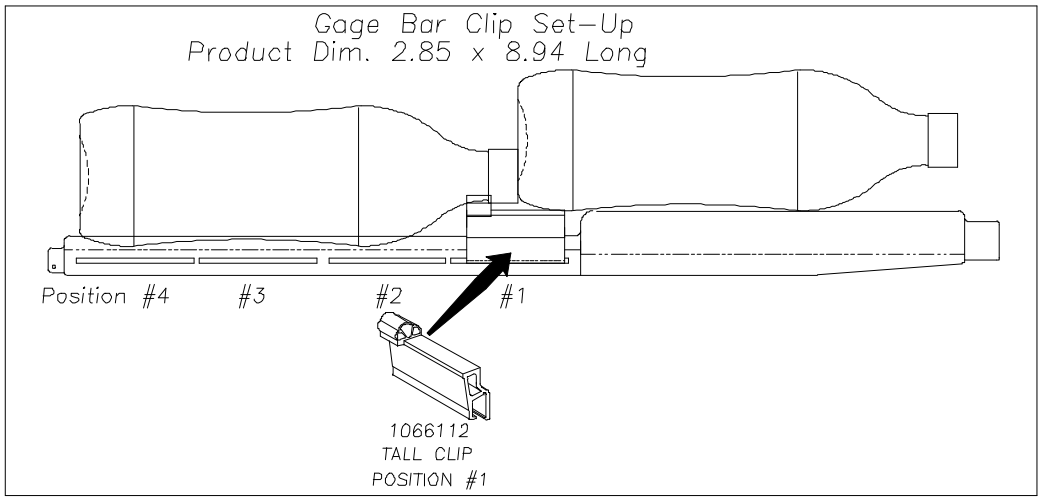

5. SET UP GUIDE.

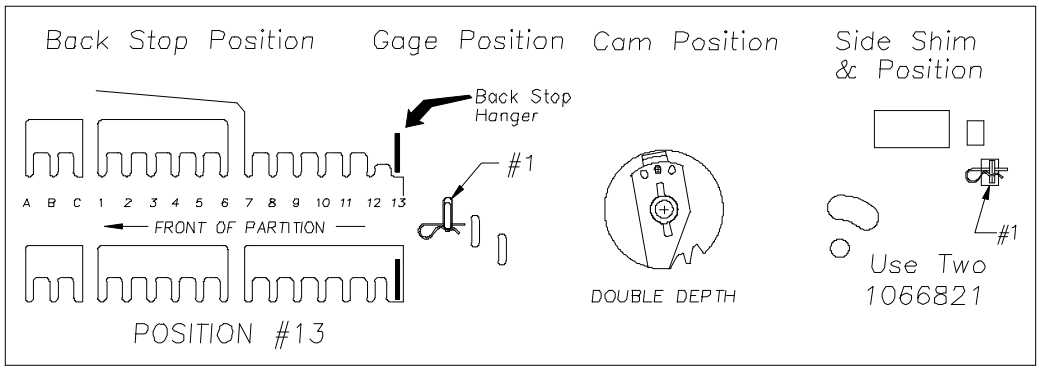

6. SOLD-OUT LEVER TO BE SHORT STYLE WITH FRONT SPACER.
SPRING TO BE LOCATED ON THE RIGHT SIDE (LOW PRESSURE SETTING).