Vendo® Engineering *Uni-2 Set Up Guide*

Size: 20oz / 591ml **Rev. A** **Date 4/26/2000**

Pkg. Description/Type: 20oz / 591ml Dr PEPPER (NON EMBOSED) TAPER NECK

Franchise: Dr PEPPER **KIT#**

Column Setup

Cam Setting	Back Spacer	Neck Guide Locations	Gage Bar Clip Location	Gage Bar Location	Side Spacer	Sold Out Flap	Sold Out Spacer
2	13	N/A	A/#1	#1	N/A	Short 1083449	1077457

Note: To properly vend product the Uni-2 must have the columns set up as illustrated.

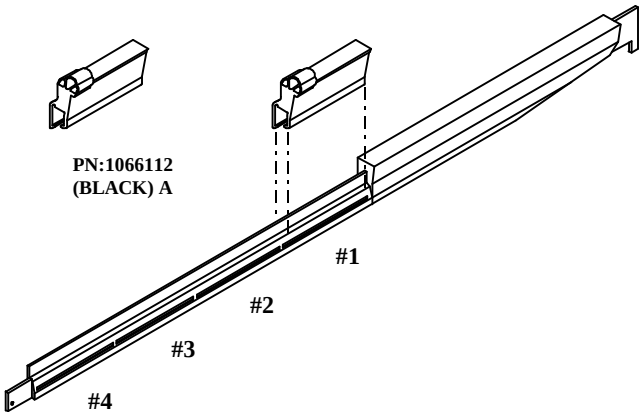

Gage Bar Clip Location

Set Up Guide

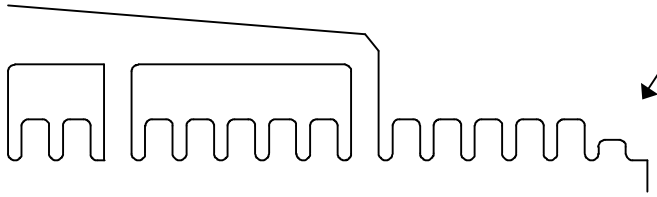

BACK SPACER

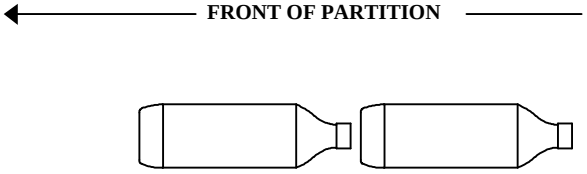

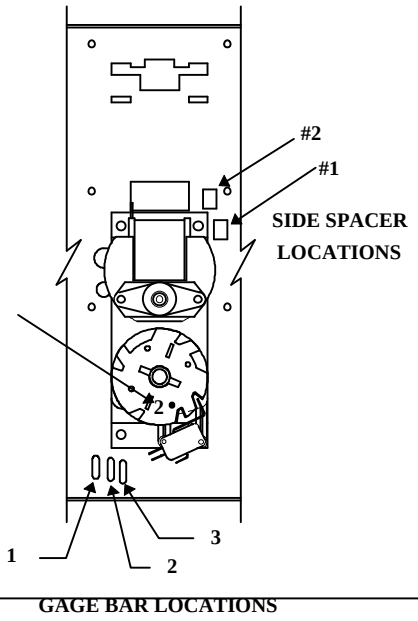

Note: Placement of bottle caps is to the back of the vendor

FOR OTHER PRODUCT SET-UP GUIDES, CONTACT THE VENDO COMPANY.
TEL: (559) 439-1770 FAX: (559) 439-2083.

Installation Instruction #