1. **PRODUCT**

   20 Oz. DR PEPPER PET- 2.91 x 9.00" Long

2. **PRODUCT CAPACITY**

   28 PER COLUMN - 72", 34 PER COLUMN - 79"

3. **SET UP GUIDE UNIVENDOR-2**

Product	CAM POSITION	BACK SPACER	GAGE BAR	Sold out Lever	SIDE SHIM	GAGE BAR CLIP		BOTTLE GUIDE
						Part No.	Position	
20 Oz. Dr Pepper	2	13	1	389242 SHORT	NONE	1066112	1	1085457M See Pg 2

Note: To properly vend 20oz. PET Dr Pepper. The Univendor-2 must have the columns setup as illustrated.

4. **GAGE BAR CLIP SET UP.**

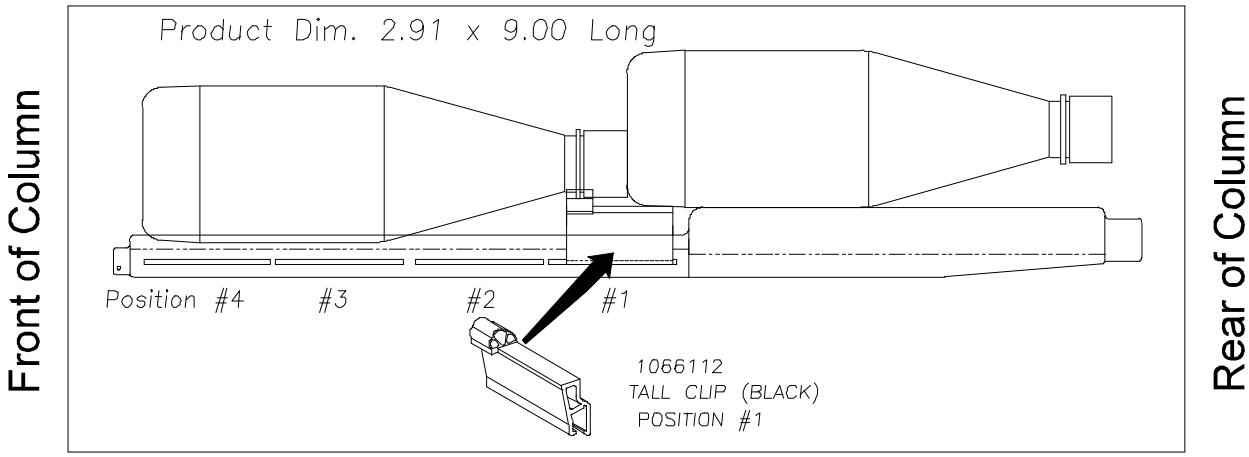

Note: Gage bar clip functioning as anti-theft device and therefore must be installed.

5. **SET UP GUIDE.**

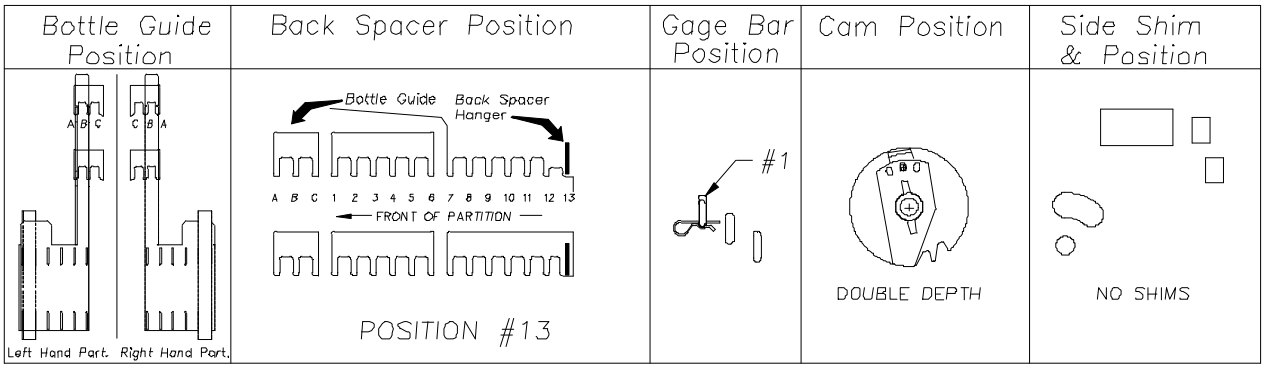

6. **BOTTLE GUIDE POSITION SET- UP: (requires kit #1085457 Installation Instructions included)**
7. **SOLD-OUT LEVER TO BE SHORT STYLE WITH FRONT SPACER :**
   SPRING TO BE LOCATED ON THE RIGHT SIDE (LOW PRESSURE SETTING).
8. **FOR OTHER PRODUCT SET UP GUIDES CONTACT VENDO COMPANY.**
   TEL: (209) 439-1770 FAX: (209) 439-2083.